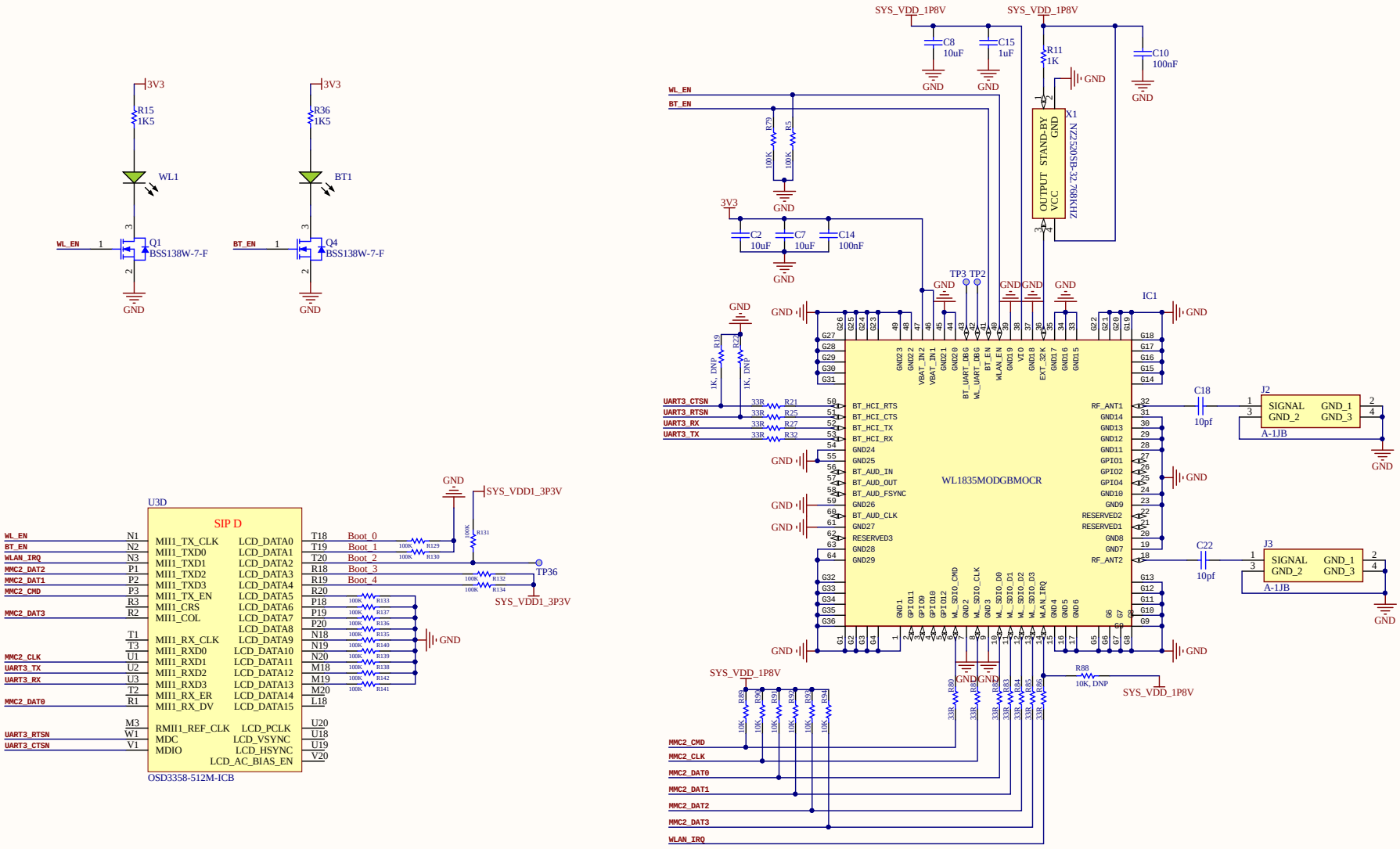

Title		
Size A3	Number	Revision
Date: 4/10/2019	Sheet of	
File: C:\Users\..\EX Wireless 1P8 10092019a.SchDoc	Drawn By:	

Board Sta